DBC 1200

CAL Library

Customer Technical Document

Rev 1.2

BWI Group Proprietary

DO NOT DISTRIBUTE OR COPY WITHOUT BWI APPROVAL

Revision History

Doc Version	Date	Change Summary
1.0	5/11/15	Initial Draft for CAL Library CTD
1.1	5/14/15	Made changes to the text in initial draft. Also, added Sid$27 to the document
1.2	5/15/15	Added section 7 and made few more changes to the text body.

Tables of Contents

1. Reference Documents: 4
2. Introduction to Cal Library 4
2.1 Advantages 4
3. Memory Map Explained 4
4. DIDs for Cal Library 5
4.1 OEM Cal selection DID $FD00 5
4.1.1 DIDs to check the contents of Cal Library - $FD01, $FD02, $FD03 5
4.1.2 DID to check current calibration in active block 6
5. Diagnostic Services to Read/Write the DIDs for CAL Library Function 7
5.1 SecurityAccess Service (SId $27) 7
5.1.1 SId $27 - Request Message Definition 8
5.1.2 SId $27 - Sub-function Parameter Level Definition 8
5.1.3 SId $27 - Data parameter Definition 9
5.1.4 SId $27 - Request Message Data Bytes 9
5.1.5 SId $27 - Positive Response Message 9
5.1.6 SId $27 - Negative Response Message 10
5.2 ReadDataByIdentifier Service (SId $22) 10
5.2.1 SId $22 - Request Message Definition 11
5.2.2 SId $22 - Sub-function Parameter Level Definition 11
5.2.3 SId $22 - Data Parameter Definition 11
5.2.4 SId $22 - Positive Response Message Data Bytes 11
5.2.5 SId $22 - Negative Response Message Data Bytes 12
5.3 WriteDataByIdentifier Service (SId $2E) 12
5.3.1 SId $2E - Request Message Definition 12
5.3.2 SId $2E - Sub-function Parameter Level Definition 12
5.3.3 SId $2E - Data Parameter Definition 12
5.3.4 SId $2E - Request Message Data Bytes 13
5.3.5 SId $2E - Positive Response Message Data Bytes 13
5.3.6 SId $2E - Negative Response Message Data Bytes 13
6. OE Assembly Plant Process 14
6.1 Generic Assembly Plant Process Flow Chart with Generic CAN IDs 15
7. Calibration Validation Check 16

1. Reference Documents:

- DBC 1200 Pressure-Build Electro-Hydraulic Control Unit ECU Diagnostic Communication for ISO 14229 Customer Technical Document Specification # 18116030 v 1.9 5-13-2015.
- DBC1200 Cal Library Seed / Key detail design spec for flash process tryout.

2. Introduction to Cal Library

Cal Library is a large block of memory with up to 8 predefined usable calibrations and 1 unusable calibration. It replaces serial calibration flash with tool using onboard boot flash programing method. Customer can select calibration to be flashed from cal library block into the "Active" block using a DID.

2.1 Advantages

- Reduces the number of parts going into a vehicle assembly plant.
- This method serves customers requesting different vehicle configurations.

3. Memory Map Explained

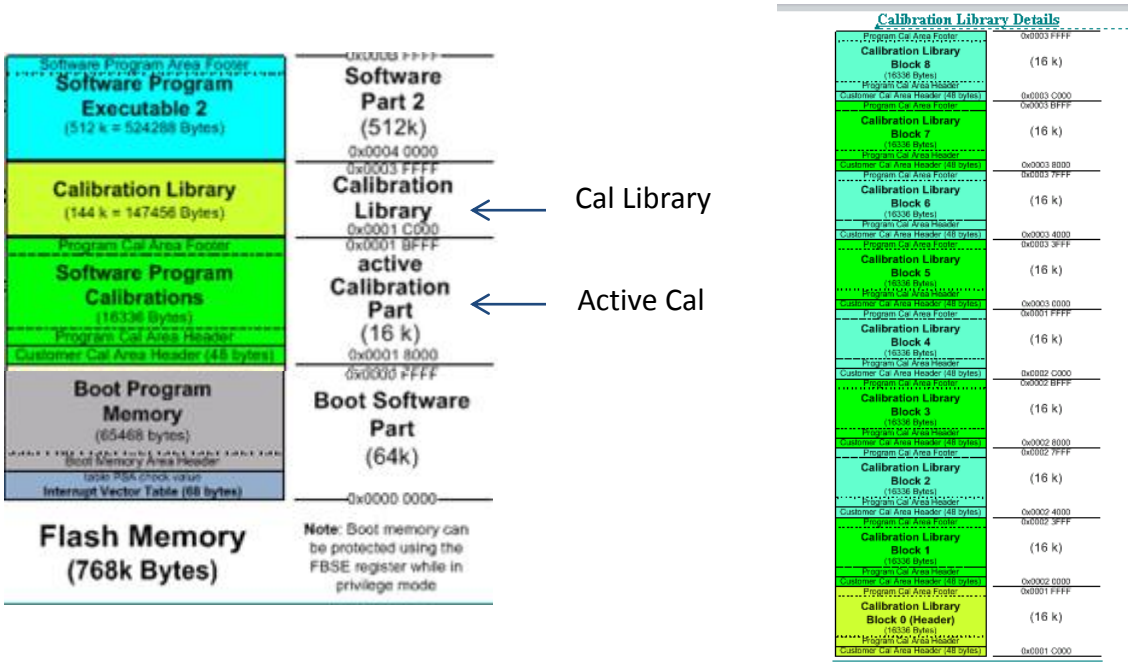

Figure 1: Memory Map DBC1200

The DBC1200 memory map consists of the following parts: 1. boot software or Boot Program Memory", 2. Program or Operational Software; 3. Calibration file or Active calibration part; 4. Calibration Library section. The Cal library consists of 8 usable blocks (calibration) and 1 unusable block (calibration). In the memory map shown in the Figure 1 above, block 0 contains header calibration information such as module part numbers and this block is unusable whereas blocks 1 - 8 can be used for storing calibrations. The Calibration Library flash process consists of copying a calibration from the library to the "Active Calibration" location. The ECU program software will then use the calibrations located in the Active Calibration location to execute logic.

4. DIDs for Cal Library

4.1 OEM Cal selection DID $FD00

Using this DID the OEM can select the cals to be flashed into the active block from the cal library.

$FD00 Supp Calibration Re-Flash Selection (Read/Write)		
DID Byte Index	**Definition**	**Display**
#1~#4	Requested Supplier Cal Part Number	USN
#5~#6	Requested Supplier Cal Part Number Suffix	ASCII

4.1.1 DIDs to check the contents of Cal Library - $FD01, $FD02, $FD03

Using these DIDs the contents of the cal library BWI part numbers can be read.

$FD01 Supp Calibration Library Part Number (Read)		
DID Byte Index	**Definition**	**Display**
#1~#4	Supplier ECU Calibration Library Part Name	USN
#5~#6	Supplier ECU Calibration Library Part Name Suffix	ASCII

$FD02 Supp Calibration Library Content 1* (Read)		
DID Byte Index	**Definition**	**Display**
#1~#4	Cal library, the block 1 cal PN.	USN
#5~#6	Cal library, the block 1 cal PN Suffix	ASCII
#7 ~#10	Cal library, the block 2 cal PN.	USN
#11~#12	Cal library, the block 2 cal PN Suffix	ASCII
#13 ~#16	Cal library, the block 3 cal PN.	USN
#17~#18	Cal library, the block 3 cal PN Suffix	ASCII
#19 ~#22	Cal library, the block 4 cal PN.	USN
#23~#24	Cal library, the block 4 cal PN Suffix	ASCII

$FD03 Supp Calibration Library Content 2* (Read)		
DID Byte Index	**Definition**	**Display**
#1~#4	Cal library, the block 5 cal PN.	USN
#5~#6	Cal library, the block 5 cal PN Suffix	ASCII
#7 ~#10	Cal library, the block 6 cal PN.	USN
#11~#12	Cal library, the block 6 cal PN Suffix	ASCII
#13 ~#16	Cal library, the block 7 cal PN.	USN
#17~#18	Cal library, the block 7 cal PN Suffix	ASCII
#19 ~#22	Cal library, the block 8 cal PN.	USN
#23~#24	Cal library, the block 8 cal PN Suffix	ASCII

4.1.2 DID to check current calibration in active block

The following DIDs can be used to check the calibrations present currently in the "active" block using the BWI calibration part number.

3004	systemSupplierECUCalibrationNumber (Read)	$22

systemSupplierECUCalibrationNumber (Read)		
DID Byte Index	**Definition**	**Display**
#1	DBCM ECU SoftwareNumber MSB	USN
#2	DBCM ECU SoftwareNumber 2nd MSB	USN
#3	DBCM ECU SoftwareNumber 2nd LSB	USN
#4	DBCM ECU SoftwareNumber LSB	USN

3034	systemSupplierECUCalibrationVersionNumber (Read)	$22

systemSupplierECUCalibrationNumber (Read)		
DID Byte Index	**Definition**	**Display**
#1	DBCM ECU SoftwareVersionNumber MSB	ASCII
#2	DBCM ECU SoftwareVersionNumber LSB	ASCII

5. Diagnostic Services to Read/Write the DIDs for CAL Library Function

The following services are used to move one of the 8 calibrations from the calibration library to the active calibration block. Diagnostic services $10, $3E, $27, $22 and $2E are required to complete the calibration flash process. Service $27, $22 and $2E are covered below. Note: Reference 1 can be used for a more in depth look at the ECU services.

5.1 SecurityAccess Service (SId $27)

For more complete details see Reference 1 - DBC 1200 Pressure-Build Electro-Hydraulic Control Unit ECU DiagnosticCommunication for ISO 14229 Customer Technical Document Specification # 18116030 v 1.9 5-13-2015

The purpose of this service is to provide a means to access data and/or diagnostic services, which have restricted access for security, emissions, or safety reasons.

Note: The security service $27 is only for BWI useage and uses a proprietary BWI security algorithm. An OEM security algorithm can be developed if necessary for using this service. This service protects for example ECU reprogramming and DID writes.

A typical example of the use of this service is as follows:

- Client requests the “Seed”
- Server sends the “Seed”
- Client sends the “Key” (appropriate for the Seed received)
- Server responds that the “Key” was valid and that it will unlock itself

The client shall request the server to "unlock" by sending the service SecurityAccess ‘requestSeed’ message. The server shall respond by sending a "seed" using the service SecurityAccess ‘requestSeed’ positive response message. The client shall then respond by returning a "key" number back to the server using the appropriate service SecurityAccess ‘sendKey’ request message. The server shall compare this "key" to one internally stored. If the two numbers match, then the server shall enable ("unlock") the client's access to specific services/data and indicate that with the service SecurityAccess ‘sendKey’ positive response message. If the two numbers do not match, this shall be considered a false access attempt. If access is rejected for any other reason, it shall not be considered a false access attempt. An invalid key requires the client to start over from the beginning with a SecurityAccess 'requestSeed' message.

If a server is already unlocked when a SecurityAccess ‘requestSeed’ message is received, that server shall respond with a SecurityAccess ‘requestSeed’ positive response message service with a seed value equal to zero (0). The client shall use this method to determine if a server is locked by checking for a non-zero seed.

There shall always be a fixed relationship for each level of security supported so that the sendKey sub-function parameter value used for any given security level shall be equal to the requestSeed sub-function parameter value used for that security level plus one.

Only one security level shall be active at any instant of time. For example, if the security level associated with requestSeed 03 hex is active and a tester request is successful in unlocking the security level associated with requestSeed 01 hex, then only the secured functionality supported by the security level associated with requestSeed 01 hex shall be unlocked at that time. Any additional secured functionality that was previously unlocked by the security level associated with requestSeed 03 hex shall no longer be active. The security levels numbering is arbitrary and does not imply any relationship between the levels.

Attempts to access security shall not prevent normal vehicle communications or other diagnostic communication.

Servers, which provide security shall support reject messages if a secure service is requested while the server is locked.

Some diagnostic functions/services requested during a specific diagnostic session may require a successful security access sequence. In such case the following sequence of services shall be required:

- DiagnosticSessionControl service
- SecurityAccess service
- Secured diagnostic service

There are different accessModes allowed for an enabled diagnosticSession (session started) in the server.

Please note that some customer applications will only use one set of seed and key pair for both DID write and reprogramming securities. Others will use each set for one single purpose.

Added note: Only two byte seed/key supported in this revision of the Cal Library flash process.

This service is only supported if requested by in Physical addressing mode.

5.1.1 SId $27 - Request Message Definition

The elements of the request message are described in the following paragraphs.

5.1.2 SId $27 - Sub-function Parameter Level Definition

The sub-function parameter securityAccessType indicates to the server the step in the process for this service, the level of security the client wants to access and the format of the seed and key.

Examples:

- “requestSeed=01 hex” identifies a fixed relationship between “requestSeed=01 hex” and “sendKey=02 hex”
- “requestSeed=03 hex” identifies a fixed relationship between “requestSeed=03 hex” and “sendKey=04 hex”

Values are defined in 2.3.1-1 for requestSeed and sendKey (suppressPosRspMsgIndicationBit (bit 7) not shown). Specific for Cal Library Flash Process.

Hex (bit 6-0)	Description	Cvt	Mnemonic
01	requestSeed Request programming Seed Request DID write protection Seed	U	RSD
02	Send Key Send Programming Key Send DID write protection Key	U	SK

Table - SId $27 Request message sub-function parameter definition

5.1.3 SId $27 - Data parameter Definition

This service does not support data parameters in the request message.

5.1.4 SId $27 - Request Message Data Bytes

A_PDU parameter	Parameter Name	Cvt	Hex Value	Mnemonic
#1	SecurityAcces Request Service Id	M	27	SA
#2	sub-function = [securityAccessType = requestSeed]	M	01	LEV_ SAT_RSD

Table– SId $27 Request message definition - sub-function = requestSeed

A_PDU parameter	Parameter Name	Cvt	Hex Value	Mnemonic
#1	SecurityAcces Request Service Id	M	27	SA
#2	sub-function = [securityAccessType = sendKey]	M	02	LEV_ SAT_SK
#3 #4	securityKey[] = [key#1 (high byte) key#2 (low byte)]	M M	00-FF 00-FF	SECKEY_ KEYHB KEYLB

Table– SId $27 Request message definition - sub-function = sendKey

5.1.5 SId $27 - Positive Response Message

A_PDU parameter	Parameter Name	Cvt	Hex Value	Mnemonic
#1	SecurityAccess Response Service Id	S	67	SAPR
#2	securityAccessType	M	01	SAT_
#3 #4	securitySeed[] = [seed#1 (highbyte) seed#m (low byte)]	C C	00-FF 00-FF	SECSEED_ SEED1HB SEED2LB

Table - SId $27 requestSeed Positive Response Message

A_PDU parameter	Parameter Name	Cvt	Hex Value	Mnemonic
#1	SecurityAccess Response Service Id	S	67	SAPR
#2	securityAccessType	M	02	SAT_

Table - SId $27 sendKey Positive Response Message

5.1.6 SId $27 - Negative Response Message

A_PDU parameter	Parameter Name	Cvt	Hex Value	Mnemonic
#1	negativeResponse Service Id	S	7F	NR
#2	testerPresent Request Service Id	M	27	TP
#3	ResponseCode = [	M		RC
	subFunctionNotSupported		12	SFNS
	incorrectMessageLengthOrInvalidFormat		13	IMLOIF
	ConditionsNotCorrect		22	CNC
	requestSequenceError		24	RSE
	invalidKey		35	IK
	exceededNumberOfAttempts		36	ENOA
	requiredTimeDelayNotExpired		37	RTDNE
	serviceNotSupportedInActiveSession]		7F	SNSIAS

Table - SId $27 Negative Response Message

Response Code (hex)	Condition
12	subFunctionNotSupported Requested sub-function is not supported
13	incorrectMessageLengthOrInvalidFormat Wrong length for the specific request (Note: BWI can support configuring software to check for only length shorter than specified)
22	ConditionsNotCorrect Request is functional addressed
24	requestSequenceError Send if the 'sendKey' sub-function is received without first receiving a 'requestSeed' request message.
35	invalidKey Send if an expected 'sendKey' sub-function value is received and the value of the key does not match the server's internally stored/calculated key.
36	exceededNumberOfAttempts Send if the delay timer is active due to exceeding the maximum number of allowed false access attempts.
37	requiredTimeDelayNotExpired Send if the delay timer is active and a request is transmitted.
7F	serviceNotSupportedInActiveSession The service is not enabled in the current diagnostic session.

Table - SId $27 Response Code

5.2 ReadDataByIdentifier Service (SId $22)

For more complete details see Reference 1 - DBC 1200 Pressure-Build Electro-Hydraulic Control Unit ECU DiagnosticCommunication for ISO 14229 Customer Technical Document Specification # 18116030 v 1.9 5-13-2015.

The ReadDataByIdentifier service allows the client to request data record values from the server identified by one or more dataIdentifiers.

The server limits the number of dataIdentifiers that can be simultaneously requested as 1.

Upon receiving a ReadDataByIdentifier request, the server will access the data elements of the records specified by the dataIdentifier parameter(s) and transmit their value in one single ReadDataByIdentifier positive response containing the associated dataRecord parameter(s).

5.2.1 SId $22 - Request Message Definition

The elements of the request message are described in the following paragraphs.

5.2.2 SId $22 - Sub-function Parameter Level Definition

This service does not use a sub-function parameter.

5.2.3 SId $22 - Data Parameter Definition

Data Byte	Parameter Name	Cvt	Hex Value	Mnemonic
#1	ReadDataByIdentifier Request Service Id	M	22	RDBLI
#2 #3	dataIdentifier = [byte#1 (MSB) byte#2]	M	 00-FF 00-FF	DID HB LB

Table - ReadDataByIdentifier Request Message

5.2.4 SId $22 - Positive Response Message Data Bytes

A_PDU parameter	Parameter Name	Cvt	Hex Value	Mnemonic
#1	**readDataByIdentifier Request Service Id**	**S**	**62**	**RDBI**
#2 #3	dataIdentifier =[byte#1 (MSB) byte#2]	M	 00-FF 00-FF	DID HB LB
#4 : #n	datarecord#1 = [data#1 : data#k	 M : C	 xx, : xx	DREC_ DATA_1 : DATA_k

Table - ReadDataByIdentifier Positive Response Message

5.2.5 SId $22 - Negative Response Message Data Bytes

A_PDU parameter	Parameter Name	Cvt	Hex Value	Mnemonic
#1	**negativeResponse Service Id**	**S**	**7F**	**NR**
#2	**readDataByIdentifier Request Service Id**	**M**	**22**	**REI**
#3	ResponseCode = [incorrectMessageLengthOrInvalidFormat requestOutOfRange]	M	 13 31	IMLOIF ROOR

Table - ReadDataByIdentifier Negative Response Message

Hex	Conditions
13	incorrectMessageLengthOrInvalidFormat Wrong length for the specific request
31	RequestOutOfRange This response code will be sent if: Any DataIdentifier in the request is invalid (reserved or not defined).

Table - Diagnostic Services $22 Response Code

5.3 WriteDataByIdentifier Service (SId $2E)

For more complete details see Reference 1 - DBC 1200 Pressure-Build Electro-Hydraulic Control Unit ECU DiagnosticCommunication for ISO 14229 Customer Technical Document Specification # 18116030 v 1.9 5-13-2015

The WriteDataByIdentifier service allows the client to write information into the server at an internal location specified by the provided data identifier. The WriteDataByIdentifier service is used by the client to write a dataRecord to a server. The data is identified by a dataIdentifier, and may or may not be secured. It is the vehicle manufacturer's responsibility that the server conditions are met when performing this service.

5.3.1 SId $2E - Request Message Definition

The elements of the request message are described in the following paragraphs.

5.3.2 SId $2E - Sub-function Parameter Level Definition

This service does not use a sub-function parameter.

5.3.3 SId $2E - Data Parameter Definition

The following data-parameters are defined for this service.

Definition
dataIdentifier This parameter identifies the server data record that the client is requesting to write to
dataRecord This parameter provides the data record associated with the dataIdentifier that the client is requesting to write to.

Table - Request message data parameter definition

5.3.4 SId $2E - Request Message Data Bytes

Data Byte	Parameter Name	Cvt	Hex Value	Mnemonic
#1	WriteDataByIdentifier Request Service Id	M	2E	WDBLI
#2 #3	dataIdentifier [] =[byte#1(MSB) byte#2]	M	 00-FF 00-FF	DID_ HB LB
#4 : #n	dataRecord[] = [data#1 : data#m]	 M : M	 xx : xx	DREC_ DATA_1 : DATA_m

Table - WriteDataByIdentifier Request Message

5.3.5 SId $2E - Positive Response Message Data Bytes

Data Byte	Parameter Name	Cvt	Hex Value	Mnemonic
#1	WriteDataByIdentifier Positive Response Service Id	S	6E	WDBLIPR
#2 #3	dataIdentifier [] =[byte#1(MSB) byte#2]	M	 00-FF 00-FF	DID_ HB LB

Table - WriteDataByIdentifier Positive Response Message

5.3.6 SId $2E - Negative Response Message Data Bytes

Data Byte	Parameter Name	Cvt	Hex Value	Mnemonic
#1	negativeResponse Service Id	S	7F	NR
#2	WriteDataByIdentifier Request Service Id	M	2E	WDBLI
#3	ResponseCode = [incorrectMessageLengthOrInvalidFormat ConditionsNotCorrect requestOutOfRange securityAccessDenied generalProgrammingFailure reqCorrectlyRcvd-RspPending serviceNotSupportedInActiveSession]	M	 13 22 31 33 72 78 7F	 IMLOIF CNC ROOR SAD GPF RCR-RP SNSIAS

Table - WriteDataByIdentifier Negative Response Message

Hex	Conditions
13	incorrectMessageLengthOrInvalidFormat This response code will be sent if the length of the data in the request message does not match the size expected by the node.
22	ConditionsNotCorrect This response code shall be sent if the operating conditions of the ECU are such that it can't perform the required action (e.g., the data for a DataIdentifier is stored in EEPROM and an EEPROM failure has occurred). This response code will occur if the node (ECU) internal conditions do not allow the writing of any DataIdentifier/ IdentificationOption. The system is currently in initialization. The system is currently in shutdown process. The system is currently in SafetySystemDiagnosticSession. The system is currently in InputOutputControlByIdentifier service active stage. The system is currently busy at modifying memory. The vehicle is moving.
31	RequestOutOfRange This response code will be sent if: The DataIdentifier in the request message is not supported.
33	securityAccessDenied This negative response code is used for when security is not yet granted to perform the required service.
72	generalProgrammingFailure Request cannot be serviced or system has error while try to change the EEPROM contents.
78	ReqCorrectlyRcvd-RspPending This response code shall be sent if writing the data to the address(es), which are referenced by the DataIdentifier, takes longer than $P2_{can_server}$ ms.
7F	serviceNotSupportedInActiveSession The service is not enabled in the current diagnostic session.

Table - Diagnostic Services $2E Response Code

6. OE Assembly Plant Process

The DBC1200 EHCU will be shipped from the BWI Production Plant with the calibration block filled with up to 8 calibrations. In the "Active Block" will be a nonfunctional calibration. The DBC1200 part when first booted in the OE Assembly plant will set a diagnostic trouble code "DTC 158: Final Vehicle Calibrations Not Programmed". No vehicle controlled brake functions will be active including ABS, TCS, and ESP. This is to prevent the incorrect calibrations ending up in a production vehicle. At this point, the following steps need to be performed in order to program the ECU with the customer required calibartion for a particular vehicle.

1. Unlock ECU for DID write using the test tool.
2. Reprogram DID $FD00, bytes 1~6 with SId $2E. Negative response code 03 7F 78 is received till the Cal flash process is completed (approximately 3 seconds) after which a positive response of 03 6E FD 00 will be received.
3. After the Cal flash process is completed and the final positive response is received the ECU will reset and no IVC messages are transmitted for about 500 msec during the ECU restart process.
4. Test tool can now query the active block for the installed Calibration part number by using DID $3004 to confirm if correct configurations are programmed using the BWI calibration part number.
5. The Diagnostic trouble code 158 will no longer be set as active, current and history. It will be completely cleared from memory and no diagnostic codes should remain.

Note:

1. Test tool must send tester present $3E during the entire Cal Flash Process. Because the cal flash process will take approximately 3.5 seconds to complete only a few $3E messages are anticipated. Typical timeout value is 5 seconds before ECU would exit a diagnostic session.

DO NOT DISTRIBUTE OR COPY WITHOUT BWI APPROVAL

2. DID $FD00 cannot be written if wheel speed > 2 kph, NRC $22 will be received in this case.
3. If DID content is incorrect a NRC $31 will be received ROOR. This will only occur if the written BWI part number in DID $FD00 does not match any of the calibration part numbers in the calibration library. This can be checked using DIDs $FD02 and $FD03.
4. DID write / CAL flash may take up to 3 seconds.
5. Programming failure may require BWI to recover the part. A NRC $72 will be received if programming failure occurs.
6. Test Tool is responsible for checking that correct calibrations are flashed in the ACTIVE block. See section 7 for details.

6.1 Generic Assembly Plant Process Flow Chart with Generic CAN IDs

The following process flow is generic examples of the cal reflash process using the calibration library functionality of the BWI ECU.

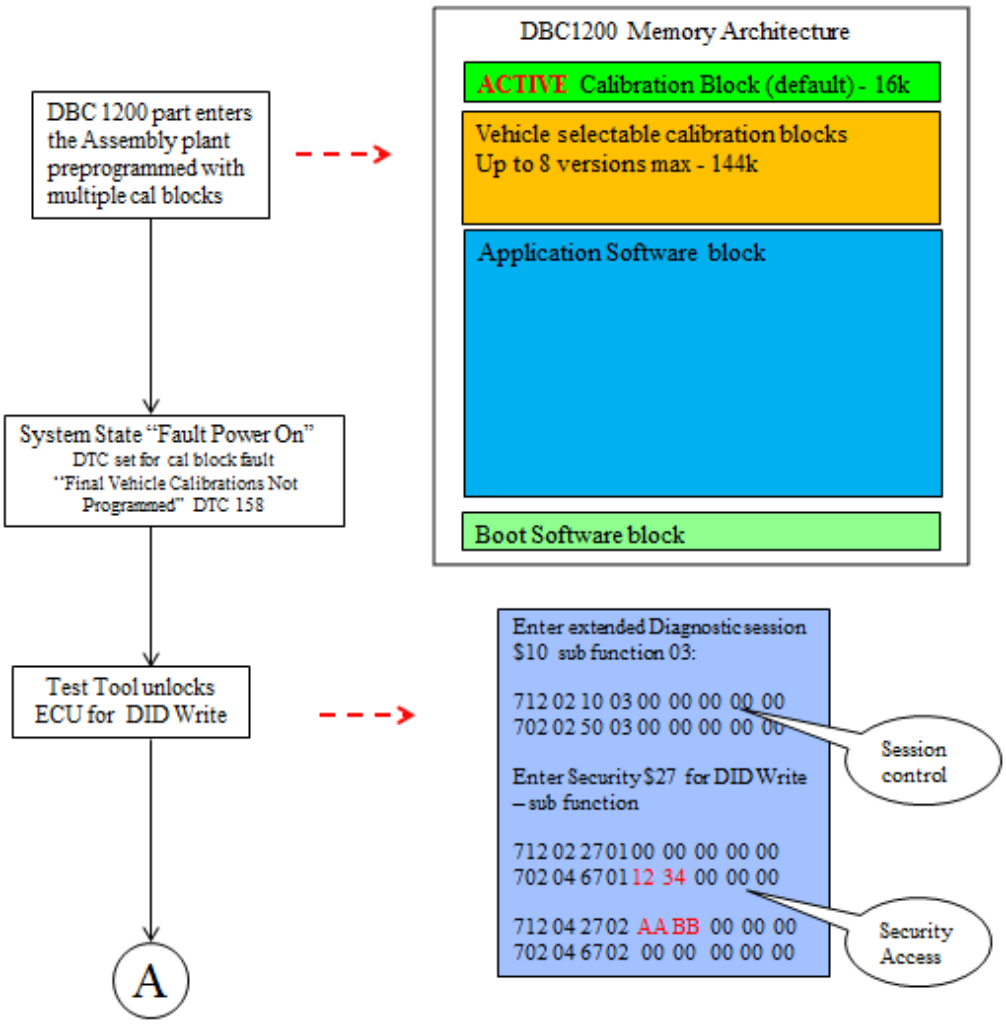

Figure 2: Generic Assembly Plant Process Flow Chart with Generic CAN IDs

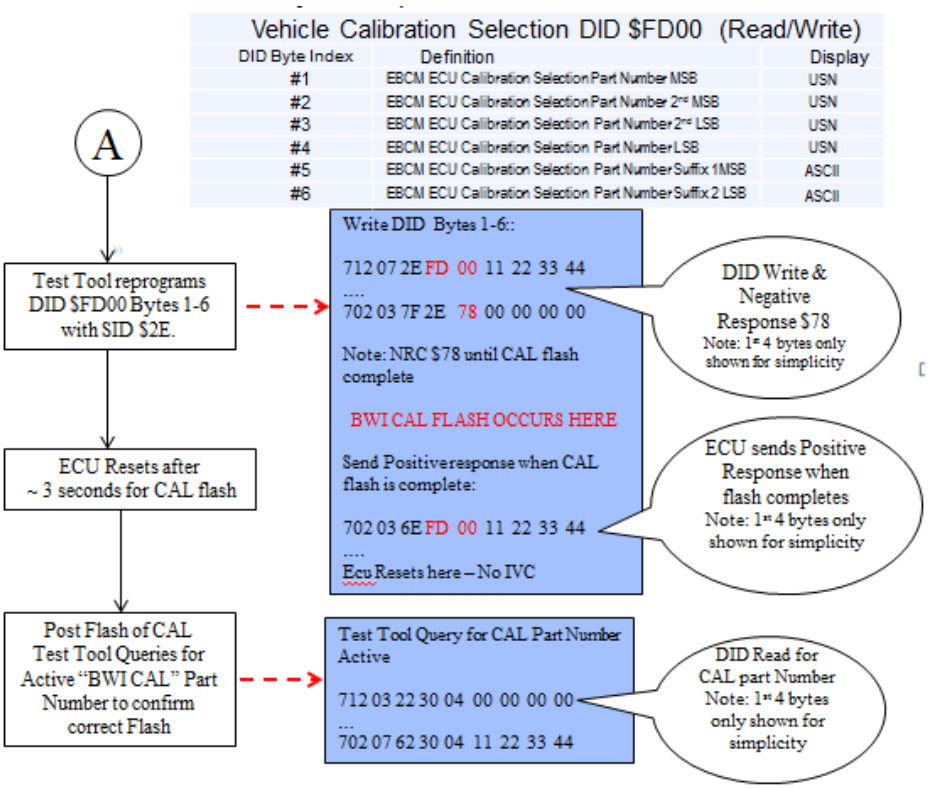

Figure 3: Generic Assembly Plant Process Flow Chart with Generic CAN IDs continued

Note: 2 or 4 byte seed / key is acceptable (2 byte shown)

7. Calibration Validation Check

The programming Test tool is responsible for checking that the correct calibration is in the Active Block of the calibration section. After reflash is complete the Test Tool can use DID $3004 to check the active block contents by BWI part number. The part number in the "Active Block" must match the written DID $FD00 as requested originally by the Test Tool. There is not a check from the server side of correct cal in the active block so the Test Tool is tasked with confirming the correct calibration is in the Active Block for the ABS ECU software to use for controlling brake systems.

$FD00 = $3004 and $3034 after reflash is complete and DTC158 is cleared.

$FD00 Supp Calibration Re-Flash Selection (Read/Write)		
DID Byte Index	**Definition**	**Display**
#1~#4	Requested Supplier Cal Part Number	USN
#5~#6	Requested Supplier Cal Part Number Suffix	ASCII

DID $3004

3004	systemSupplierECUCalibrationNumber (Read)	$22

systemSupplierECUCalibrationNumber (Read)		
DID Byte Index	**Definition**	**Display**
#1	DBCM ECU SoftwareNumber MSB	USN
#2	DBCM ECU SoftwareNumber 2nd MSB	USN
#3	DBCM ECU SoftwareNumber 2nd LSB	USN
#4	DBCM ECU SoftwareNumber LSB	USN

DID $3034

3034	systemSupplierECUCalibrationVersionNumber (Read)	$22

systemSupplierECUCalibrationNumber (Read)		
DID Byte Index	**Definition**	**Display**
#1	DBCM ECU SoftwareVersionNumber MSB	ASCII
#2	DBCM ECU SoftwareVersionNumber LSB	ASCII